HELI合力

20-25t

G2 series 20-25t internal combustion
counterbalance forklift truck



www.halaheavy.com



宽视野、高强度起重系统
Wide view and High Strength Lifting System

- 拥有自主知识产权的宽视野门架与侧移调距叉，为操作者提供宽敞的前方视野，有利于工作安全性的改善与工作效率的提高。
- Excellent front view which is benefit for the work safety improvementand working efficiency is provide with wide view mast which hasproprietary intellectual property and fork positioner with side shifting.

发动机系统 Engine System

原装进口VOLVO TAD851VE柴油机发动机

- 国Ⅲ排放，排量7.7L
- 电子油门
- 发动机总线仪表，信息实时显示
- 低速扭矩大，响应快；
- 燃油经济性好，噪音低。

Imported VOLVO TAD851VE diesel engine

- China III, displacement 7.7L
- Electronic throttle
- BUS control, real time display of information
- Large torque at low speed and fast response
- Good fuel economy and low noise



变速箱+变矩器 Gearbox &Torque Converter

原装进口ZF 3WG211变速箱

- 手自一体智能换档技术
- 换挡平顺无冲击
- 智能换挡更便捷
- 动力匹配更高效
- 安全可靠噪音低
- 带有故障诊断仪

Imported ZF 3WG211 transmission box

- Tiptronic intelligent gear shifting technology
- Smooth gear shifting without shock
- Easy gear shifting
- High efficient power matching
- Safe and reliable; low noise
- With fault diagnosis function



合力智能车队管理系(选配) HELI smart fleet management system (optional)

- 车辆定位
- 远程诊断
- 远程监控
- 维保提示
- 电池管理
- 统计报表
- 车辆管理
- 身份识别(选配)
- 称重管理(选配)

- Vehicle positioning
- Remote diagnosis
- Remote monitoring
- Maintenance reminder
- Battery management
- Statistical form
- Vehicle management
- Identification recognition (optional)
- Weight management (optional)





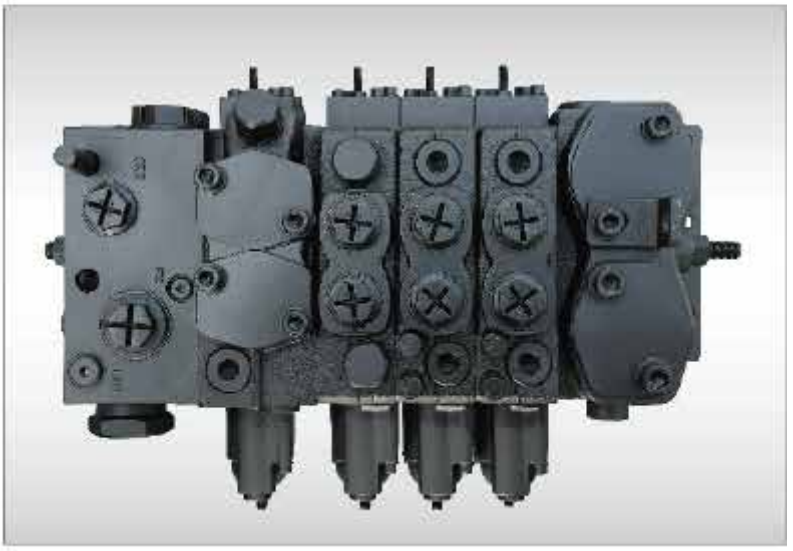

液压制动系统 Hydraulic brake system

- 带有负载敏感功能的轴向柱塞变量泵，节能，静音；
- 多路阀采用液控先导操作方式，可远距离控制，操纵轻便舒适；
- 采用优先转向功能的全液压转向系统，转向操作轻便、灵敏，可靠性高；
- 全液压湿式制动系统，制动力可靠，平稳，免维护；
- 液压制动油箱分离的结构设计，保证油品清洁度，降低液压系统故障率；

- Axial piston variable pump with load sensing function is energy saving and silent.
- Hydraulic controlled pilot operation of control valve has remote control function and is easy and comfort for operation.
- Full hydraulic steering system with steering priority has easy and reliable operation and high reliability.
- Hydraulic wet type brake system is reliable, stable and free from maintenance.
- Separated oil tank for hydraulic and brake ensures oil cleanness and reduces the fault code of hydraulic system.







湿式驱动桥 Wet type drive axle

免维护
特殊的结构设计和制动原理，防尘防水，为您节约维护成本

制动安全可靠
满足长时间高强度短距离频繁制动作业需求。

- **Maintenance free**
  Specially designed structure and brake principle provides anti-dust and anti-water function and saves your maintenance cost.
- **Safe and reliable brake**
  Working requirements such as Long time, high duty, short distance or frequent brake can be satisfied.



标配OPS(操作者存在感应系统) Standard configuration of OPS

整车OPS系统
操作人员离开座位时，整车自动断开动力，无行走

OPS for the whole truck
Truck power will be cut automatically and the truck can not be operated when operator is away from seat.



25t-1200 20t-1200



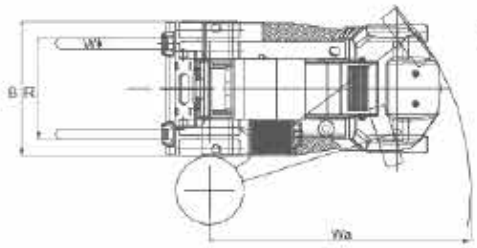

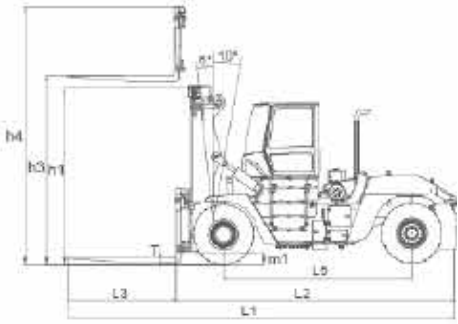

性能参数 Performance specifications

型号 Model		CPCD200	CPCD250
单位 Unit		mm	
外形尺寸 Overall dimension	L1全长（带货叉） Overall length（with forks）	8742	
	B全宽 Overall width	3040	
	h1全高（门架） Overall height（at mast）	3995	
	h4作业时最大高度 Overall height（at works）	5995	
L5轴距 Wheel base		4250	
h3起升高度（标准） Lift height（standard）		4000	
m1最小离地间隙（门架处） Min. underclearance		250	
货叉 Fork	L3货叉长度 Length	2440	
	W货叉宽度 Width	250	
	T货叉厚度 Thickness	110	
	R货叉调节范围 Adjustable range	820~2700	
Wa最小转弯半径（外部） Min.turning radius(external)		5920	
α/β 门架倾角 Mast tilt angle（fwd/bwd）		6° / 10°	

CPCD200-250 基本型门架 Wide view mast

门架类型 Mast name	最大起升高度 Max.fork Height (mm)	承载能力 Loading capacity (CPCD200)(kg)	承载能力 Loading capacity (CPCD250)(kg)	门架全高 Overall height (mm)	倾角 (前/后) Tilt angle (F/B)	备 注 Remarks
M400	4000	20000	25000	3995	6° /10°	标准型 standard equipment
M450	4500	20000	25000	4245	6° /10°	
M500	5000	20000	25000	4495	6° /10°	
M550	5500	20000	25000	4745	6° /10°	
M600	6000	20000	25000	4995	6° /10°	
M650	6500	20000	25000	5245	6° /10°	
M700	7000	20000	25000	5495	6° /10°	
M750	7500	20000	25000	5745	6° /10°	
M800	8000	20000	25000	5995	6° /10°	

G2 20-25t

性能参数 Performance specifications

型号 Model		单位 Unit	CPCD200-VZ1-12IIIG2	CPCD250-VZ1-12IIIG2
额定起重量 Rated capacity		kg	20000	25000
载荷中心距 Load center		mm	1200	
动力形式 Power type			柴油 Diesel engine	
起升速度（空载/满载） Lifting speed（unloaded/loaded）		mm/s	310/270	
下降速度（空载/满载） (Descenting speed unloaded/loaded）		mm/s	≥300/≤600	
最大行驶速度（满/空载） Max.Travelling speed(loaded/unloaded)		km/h	22/24	
最大爬坡能力（满载） Max. Gradeability(loaded)		%	27	
轮胎 Tire	类型（前/后） Type(front/rear)		充气胎4/2 Pneumatic tire	
	规格 Size		14.00-24-28PR	
蓄电池电压/容量 Battery voltage/capacity		V/Ah	24/150	
发动机 Engine	发动机生产厂型号 Mannfacture Model		VOLVO TAD851	
	额定功率/转速 Rated output/ Speed	kW/rpm	185/2200	
	最大扭矩/转速 Max. torque/ Speed	Nm/rpm	1160/1350	
	缸数 Cylinder number		6	
	排量 Displacement	L	7.7	
变速箱变速档数（前/后型式） Transmission gear shift（front/rear type）			3/3 液力换向 Hydraulic reversing	

标准配置 Standard Configuration

宽视野门架 Wide view mast	侧移调距叉 Side-shifting Fork Positioner	制动油液位计 Gauge for brake oil	变量系统 Variable syestem
标准货叉 Standard fork	电喇叭 Electric horn	液压油液位计 Hydraulic oil level gauge	花纹耐用轮胎 Durable tire with decorative pattern
转向指示灯 Steering indicator	电液换向 Electro-hydraulic changing-over	四片多路阀 Four-piece control valve	倾斜可调转向管柱 Tile and adjustable steering column
倒车镜 Back-up mirror	机械式空滤器堵塞报警 Mechanical type air filter obstruction alarm	倾斜油路自锁阀 Tilt self-lock valve	牵引销 Traction pin
前组合灯 Front combination lamp	冷暖空调 Air conditioning	起升油路自锁阀 Flow regulator of lifting oil circuit	高排气 High exhaust
后组合灯 Rear combination lamp	倾翻驾驶室 Tilting cab	全液压动力转向 Fully-hydraulic powered steering	进气装置 Air inlet device
旋转警示灯 Rotary warning lamp	倒车雷达 Reversing radar	液压回路滤油器 Oil filter of hydraulic oil loop	随车工具 Driver's tool
倒车蜂鸣器 Reversing buzzer	倒车影像 Reversing image	全悬浮座椅 Full suspension seat	
倒车灯 Back-up lamp	整车行走OPS OPS (for driving)		

选用装置和附件 Optional Devices and Accessories

普通实心胎 Common solid tyre	串杆 String rod	起升OPS OPS (for lifting)	吊臂 Crane jib
用户指定颜色 User designated color	称重系统 Weighing system	货叉套 Fork extension	管线材吊具 Slings
语音倒车喇叭 Reversing horn speaker			

HELI合力



便捷高效的点检维护 Easy and high efficient daily inspection

- **驾驶室电动倾翻系统**
  自动倾翻系统使得内部维护方便快捷，电动辅助液压驱动倾翻油缸使驾驶室向右侧倾翻大约60°，易于维修保养。
- **大角度掀翻机罩**
  敞开式发动机机罩，保证快速高效的维护，通过自锁式气弹簧安全便捷打开机罩。

- **Cab electric tilting system**
  Automatic tilting system facilitates interior maintenance; Hydraulic drives tilting cylinder with electric assistance making cab tilt 60° right ward which makes maintenance easy.
- **Engine hood with large opening angle**
  Open type engine hood which can be open through self-lock spring ensures easy and high efficient maintenance.

- 合力产品不断更新和改进中，合力保留在没有事先告知用户的情况下，更改整体参数及设计的权利。
  Our products are constantly updated and improved. Parameters and design are subject to change without prior notice.
- 文中插图不一定是该机型的标准款，插图中产品配置和外观颜色与实际机型存在差异，以实物为准。
  The configuration and color of the products in figures may be different from the actual delivered model. Please in kind prevails.